EOM

ENGINEERING OPERATION
& MAINTENANCE MANUAL

P2 Clamped Plastic Pump

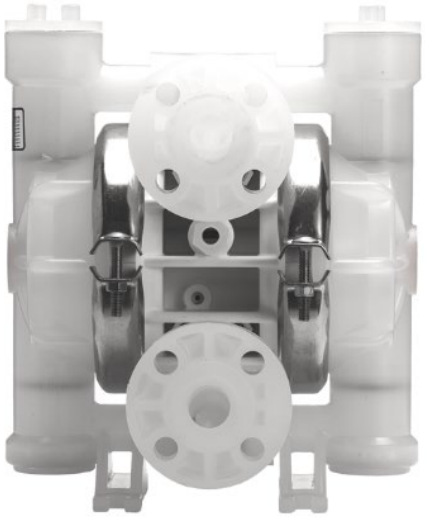

PSG a DOVER company

Where Innovation Flows

WILDEN®

WIL-10150--E-12

Copyright
Copyright 2018 PSG®, a Dover Company. All rights reserved.

PSG reserves the right to modify the information and illustrations in this document without prior notice. The product described in this document is furnished under a license agreement or nondisclosure agreement. No part of this document may be reproduced, stored in a retrieval system, or transmitted in any form or any means electronic or mechanical, including photocopying and recording, without the written permission of PSG, a Dover Company, except as described by the terms of those agreements.

This is a non-contractual document.

Trademarks
PSG and the PSG logo are registered trademarks of PSG. Wilden® is a registered trademark of PSG California LLC. Pro-Flo® SHIFT and Pro-Flo® are registered trademarks of PSG California LLC. Wil-Flex® is a trademark of PSG California LLC. Saniflex™ is a trademark of PSG California LLC.

All trademarks, names, logos and service marks (collectively “trademarks”) in this document are registered and unregistered trademarks of their respective owners. Nothing contained in this document should be construed as granting any license or right to use any trademark without the prior written permission of the trademark owner.

Warranty
Each and every product manufactured by Wilden is built to meet the highest standards of quality. Every pump is functionally tested to ensure integrity of operation. Wilden warrants that pumps, accessories and parts manufactured or supplied by it to be free from defects in material and workmanship for a period of five (5) years from date of installation or six (6) years from date of manufacture, whichever comes first.

For more information, and to register your Wilden pump for warranty, please visit https://www.psgdover.com/wilden/support/warranty-registration.

Certifications

CE

CONTENTS

SECTION 1: Precautions – Read First! **4**
SECTION 2: Wilden Pump Designation System **5**
SECTION 3: How It Works **6**
SECTION 4: Dimensional Drawings **7**
SECTION 5: Performance **8**
P2 Plastic Rubber-Fitted 8
P2 Plastic TPE-Fitted 8
P2 Plastic Reduced-Stroke PTFE-Fitted 9
P2 Plastic Full-Stroke PTFE-Fitted 9
Suction Lift Capability 10
SECTION 6: Suggested Installation, Operation, Maintenance, and Troubleshooting **11**
SECTION 7: Disassembly/Reassembly **14**
Pump Disassembly 14
Air Valve Disassembly 17
Reassembly Hints and Tips 19
Gasket Kit Installation 21
SECTION 8: Exploded View and Parts List **22**
SECTION 9: Elastomer Options **24**

SECTION 1

PRECAUTIONS – READ FIRST!

WARNING: Always wear safety glasses when operating a pump to avoid eye injury. If diaphragm rupture occurs, material being pumped may be forced out of the air exhaust.

CAUTION: Do not apply compressed air to the exhaust port – pump will not function.

CAUTION: Do not over-lubricate air supply– excess lubrication will reduce pump performance. Pump is pre-lubed.

TEMPERATURE LIMITS:

Acetal	–29°C to 82°C	–20°F to 180°F
Buna-N	–12°C to 82°C	10°F to 180°F
Geolast®	–40°C to 82°C	–40°F to 180°F
Neoprene	–18°C to 93°C	0°F to 200°F
Nordel® EPDM	–51°C to 138°C	–60°F to 280°F
Nylon	–18°C to 93°C	0°F to 200°F
PFA	–7°C to 107°C	45°F to 225°F
Polypropylene	0°C to 79°C	32°F to 175°F
Polyurethane	–12°C to 66°C	10°F to 150°F
PVDF	–12°C to 107°C	10°F to 225°F
Saniflex™	–29°C to 104°C	–20°F to 220°F
SIPD PTFE with EPDM-backed	4°C to 137°C	40°F to 280°F
SIPD PTFE with Neoprene-backed	4°C to 93°C	40°F to 200°F
PTFE*	4°C to 104°C	40°F to 220°F
FKM	–40°C to 177°C	–40°F to 350°F
Wil-Flex™	–40°C to 107°C	–40°F to 225°F

* 4°C to 149°C (40°F to 300°F) - 13 mm (1/2") and 25 mm (1") models only.

NOTE: Not all materials are available for all models. See "Wilden Pump Designation System" material options for your pump.

CAUTION: When choosing pump materials, be sure to check the temperature limits for all wetted components. Example: FKM has a maximum limit of 177°C (350°F), but polypropylene has a maximum limit of only 79°C (175°F).

CAUTION: Maximum temperature limits are based on mechanical stress only. Certain chemicals will reduce maximum safe operating temperatures significantly. Consult the Chemical Resistance Guide for chemical compatibility and temperature limits.

CAUTION: All Wilden pumps are capable of passing solids. Use a strainer on the pump intake to ensure that the pump's rated solids capacity is not exceeded.

CAUTION: Do not exceed 8.6 bar (125 psig) air supply pressure.

CAUTION: The process fluid and cleaning fluids must be chemically compatible with all wetted pump components. Consult Chemical Resistance Guide.

CAUTION: Thoroughly flush pumps before installing them into process lines. Clean and/or sanitize FDA- and USDA- approved pumps before using them.

CAUTION: Before attempting any maintenance or repair, disconnect the compressed air line to the pump and allow all air pressure to bleed from the pump. Disconnect all intake, discharge, and air lines. Drain the pump by turning it upside down and allowing any fluid to flow into a suitable container. Be aware of any hazardous effects of contact with your process fluid.

CAUTION: Before attaching the air line to the pump, blow out the air line for 10 to 20 seconds to make sure all pipeline debris is clear. Use an in-line air filter. A 5µ (micron) air filter is recommended.

CAUTION: Pro-Flo pumps cannot be used in submersible applications.

CAUTION: Before installation, tighten all hardware.

NOTE: Materials of construction and elastomer material may influence suction lift parameters. Please refer to "Performance" for specifics.

NOTE: When installing PTFE diaphragms, it is important to tighten outer pistons simultaneously (turning in opposite directions) to ensure tight fit. (See "Maximum Torque Specifications").

NOTE: Some PTFE-fitted pumps come standard from the factory with expanded PTFE gaskets installed in the diaphragm bead of the liquid chamber. PTFE gaskets cannot be re-used.

NOTE: In the event of a power failure, close the shut-off valve if you do not want the pump to restart when the power returns.

WARNING: This product can expose you to chemicals including Nickel, Chromium, Cadmium, or Cobalt, which are known to the State of California to cause cancer and/or birth defects or other reproductive harm. For more information, go to www.P65Warnings.ca.gov.

SECTION 2

WILDEN PUMP DESIGNATION SYSTEM

P2 PLASTIC
25 mm (1") Pump
Maximum Flow Rate:
140 lpm (37 gpm)

LEGEND P2 / X X X X X / X X X / X X / X X X / X X X X

- **MODEL**
- **WETTED PATHS**
- **OUTER PISTON**
- **AIR CHAMBERS**
- **CENTER BLOCK**
- **AIR VALVE**
- **DIAPHRAGMS**
- **VALVE BALL**
- **VALVE SEAT**
- **O-RING**
- **SPECIALTY CODE** (if applicable)

MATERIAL CODES

MODEL
P2 = PRO-FLO®

WETTED PATH
K = PVDF
P = POLYPROPLYENE

OUTER PISTON
K = PVDF
Z = NO OUTER PISTON

CENTER BLOCK
PP = POLYPROPYLENE

AIR VALVE
P = POLYPROPYLENE

DIAPHRAGMS
BNS = BUNA-N (RED DOT)
EPS = EPDM (BLUE DOT)
FSL = FULL STROKE SANITARY SANIFLEX™ IPD [HYTREL® (CREAM)]
FSS = SANIFLEX™ [HYTREL® (CREAM)]
FWL= FULL STROKE SANITARY WIL-FLEX™ IPD) SANTOPRENE® (TWO BLACK DOTS)]
LEL= PTFE-EPDM BACKED LAMINATE IPD (TWO BLUE DOTS)
NES = NEOPRENE (GREEN DOT)
SSL = FULL-STROKE SANIFLEX™ IPD [HYTREL® (CREAM)]
TEU = PTFE W/EPDM BACK-UP (WHITE)
TNU = PTFE W/NEOPRENE BACK-UP (WHITE)
TSS = FULL-STROKE PTFE W/SANIFLEX™ BACKUP
TSU = PTFE W/SANIFLEX™ BACKUP (WHITE)
TWS = FULL-STROKE PTFE W/WIL-FLEX™ BACKUP
VTS = FKM (WHITE DOT)
WFS = WIL-FLEX™ [SANTOPRENE® (THREE BLACK DOTS)]
WWL = FULL STROKE WIL-FLEX™ IPD) SANTOPRENE® (THREE BLACK DOTS)]

VALVE BALLS
BN = BUNA-N (RED DOT)
EP = EPDM (BLUE DOT)
FS = SANIFLEX™ [HYTREL® (CREAM)]
NE = NEOPRENE (GREEN DOT)
TF = PTFE (WHITE)
VT = FKM (WHITE DOT)
WF = WIL-FLEX™ [SANTOPRENE® (THREE BLACK DOTS)]

VALVE SEATS
K = PVDF
P = POLYPROPYLENE

O-RINGS
BN = BUNA-N (RED DOT)
TV = PTFE ENCAP. FKM
WF = WIL-FLEX™ (SANTOPRENE®)

SPECIALTY CODES

0100	Wil-Gard II™ 110V
0102	Wil-Gard II™ sensor wires ONLY
0103	Wil-Gard II™ 220V
0206	PFA coated hardware,Wil-Gard II™ sensor wires ONLY
0400	P2 plastic
0402	P2 plastic, PFA coated hardware
0404	P2 plastic, DIN flange
0406	P2 plastic, PFA coated hardware,flange
0415	P2 plastic, Wil-Gard II™ sensor wires ONLY
0416	P2, PFA coated hardware, Wil-Gard II™ sensor wires ONLY
0420	P2 plastic, Wil-Gard II™ 110V
0423	P2 plastic, PFA coated hardware, Wil-Gard II™ 110V
0424	P2 plastic, Wil-Gard II™ 220V, DIN flange
0426	P2 plastic, PFA coated hardware, WilGard II™ 220V, DIN flange
0428	P2 plastic, Wil-Gard II™ 220V
0430	P2 plastic, SS outer pistons
0603	PFA coated hardware, Wil-Gard II™ 110V
0608	PFA coated hardware, Wil-Gard II™ 220V

! **NOTE:** Most elastomeric materials use colored dots for identification.

! **NOTE:** Not all models are available with all material options

SECTION 3

HOW IT WORKS – AIR-OPERATED DOUBLE-DIAPHRAGM PUMP

The Wilden diaphragm pump is an air-operated, positive displacement, self-priming pump. These drawings show flow pattern through the pump upon its initial stroke. It is assumed the pump has no fluid in it prior to its initial stroke.

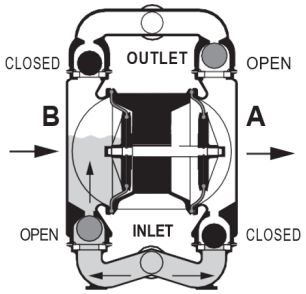

FIGURE 1 The air valve directs pressurized air to the back side of diaphragm A. The compressed air is applied directly to the liquid column separated by elastomeric diaphragms. The diaphragm acts as a separation membrane between the compressed air and liquid; a balanced load removes mechanical stress from the diaphragm. The compressed air moves the diaphragm away from the center of the pump. The opposite diaphragm is pulled in by the shaft connected to the pressurized diaphragm. Diaphragm B is on its suction stroke; air behind the diaphragm has been forced out to atmosphere through the exhaust port of the pump. The movement of diaphragm B toward the center of the pump creates a vacuum within chamber B. Atmospheric pressure forces fluid into the inlet manifold forcing the inlet valve ball off its seat. Liquid is free to move past the inlet valve ball and fill the liquid chamber (see shaded area).

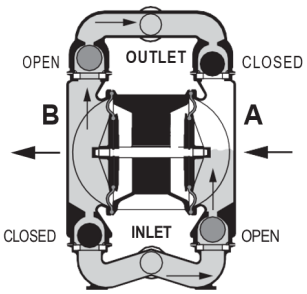

FIGURE 2 When the pressurized diaphragm, diaphragm A, reaches the limit of its discharge stroke, the air valve redirects pressurized air to the back side of diaphragm B. The pressurized air forces diaphragm B away from the center while pulling diaphragm A to the center. Diaphragm B is now on its discharge stroke. Diaphragm B forces the inlet valve ball onto its seat due to the hydraulic forces developed in the liquid chamber and manifold of the pump. These same hydraulic forces lift the discharge valve ball off its seat, while the opposite discharge valve ball is forced onto its seat, forcing fluid to flow through the pump discharge. The movement of diaphragm A toward the center of the pump creates a vacuum within liquid chamber A. Atmospheric pressure forces fluid into the inlet manifold of the pump. The inlet valve ball is forced off its seat allowing the fluid being pumped to fill the liquid chamber.

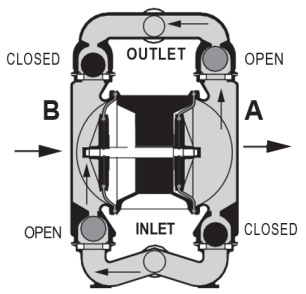

FIGURE 3 At completion of the stroke, the air valve again redirects air to the back side of diaphragm A, which starts diaphragm B on its exhaust stroke. As the pump reaches its original starting point, each diaphragm has gone through one exhaust and one discharge stroke. This constitutes one complete pumping cycle. The pump may take several cycles to completely prime depending on the conditions of the application.

HOW IT WORKS – AIR DISTRIBUTION SYSTEM

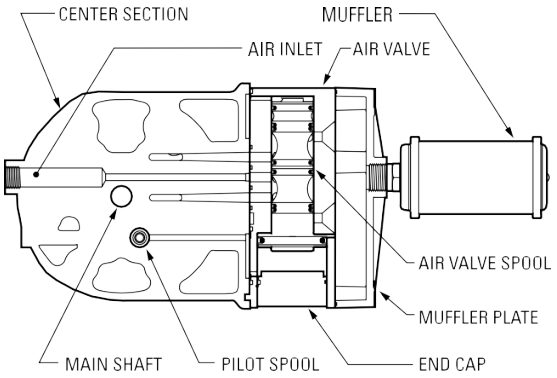

The Pro-Flo® patented air distribution system incorporates two moving parts: the air valve spool and the pilot spool. The heart of the system is the air valve spool and air valve. This valve design incorporates an unbalanced spool. The smaller end of the spool is pressurized continuously, while the large end is alternately pressurized then exhausted to move the spool. The spool directs pressurized air to one air chamber while exhausting the other. The air causes the main shaft/diaphragm assembly to shift to one side — discharging liquid on that side and pulling liquid in on the other side. When the shaft reaches the end of its stroke, the inner piston actuates the pilot spool, which pressurizes and exhausts the large end of the air valve spool. The repositioning of the air valve spool routes the air to the other air chamber

DIMENSIONAL DRAWING

P2 PLASTIC

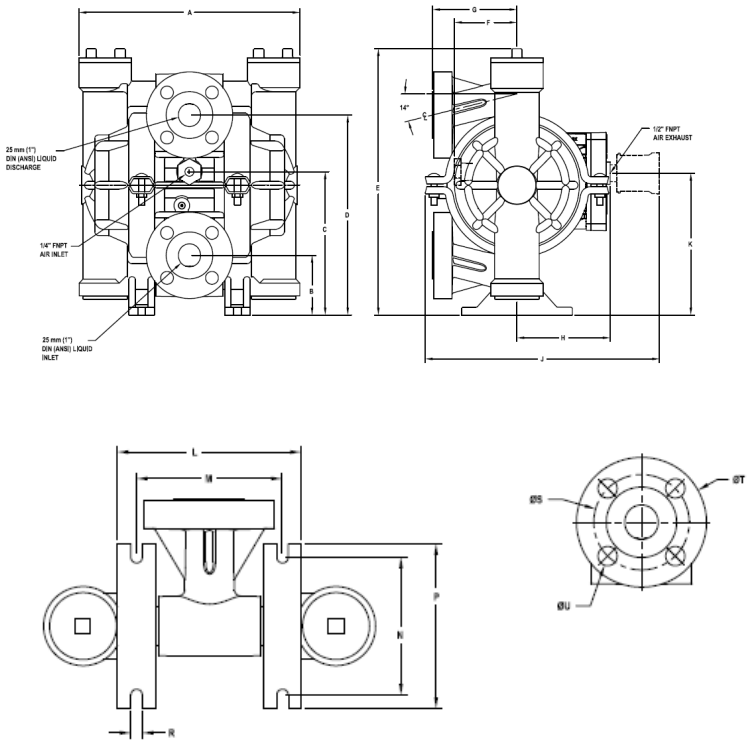

DIMENSIONS

ITEM	METRIC (mm)	STANDARD (inch)
A	277	10.9
B	76	3.0
C	180	7.1
D	249	9.8
E	333	13.1
F	81	3.2
G	107	4.2
H	124	4.9
J	292	11.5
K	180	7.1
L	152	6.0
M	122	4.8
N	114	4.5
P	137	5.4
R	10	0.4
DIN		
S	84 DIA.	3.3 DIA.
T	114 DIA.	4.5 DIA.
U	15 DIA.	0.6 DIA.
ANSI		
S	79 DIA.	3.1 DIA.
T	109 DIA.	4.3 DIA.
U	15 DIA.	0.6 DIA.

LW0062 REV. A

SECTION 5

PERFORMANCE

P2 PLASTIC RUBBER-FITTED

Ship Weights.....Polypropylene 8 kg (18 lb)
PVDF 10 kg (23 lb)
Air Inlet.....6 mm (1/4")
Inlet.....25 mm (1")
Outlet.....25 mm (1")
Suction Lift.....5.5 m Dry (28')
8.8 m Wet (29')
Disp. per Stroke[1].....0.31 L (0.082 gal)
Max. Flow Rate.....140 lpm (37 gpm)
Max. Size Solids.....3.2 mm (1/8")

[1]Displacement per stroke was calculated at 4.8 bar (70 psig) air inlet pressure against a 2.1 bar (30 psig) head pressure.

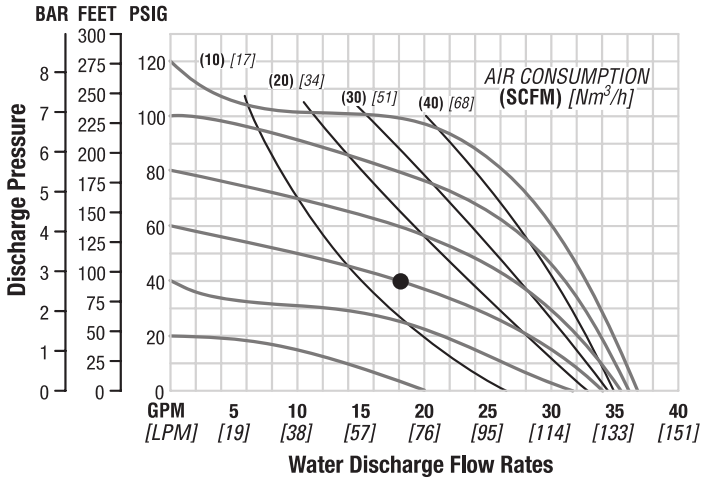

Flow rates indicated on chart were determined by pumping water. For optimum life and performance, pumps should be specified so that daily operation parameters will fall in the center of the pump's performance curve.

Example: To pump 68 lpm (18 gpm) against a discharge pressure head of 2.7 bar (40 psig) requires 4.1 bar (60 psig) and 21.9 Nm^3/h (13 scfm) air consumption.

Caution: Do not exceed 8.6 bar (125 psig) air supply pressure.

P2 PLASTIC TPE-FITTED

Ship Weights.....Polypropylene 8 kg (18 lb)
PVDF 10 kg (23 lb)
Air Inlet.....6 mm (1/4")
Inlet.....25 mm (1")
Outlet.....25 mm (1")
Suction Lift.....5.5 m Dry (28')
8.8 m Wet (29')
Disp. per Stroke[1].....0.39 L (0.104 gal)
Max. Flow Rate.....140 lpm (37 gpm)
Max. Size Solids.....3.2 mm (1/8")

[1]Displacement per stroke was calculated at 4.8 bar (70 psig) air inlet pressure against a 2.1 bar (30 psig) head pressure.

Example: To pump 68 lpm (18 gpm) against a discharge pressure head of 2.7 bar (40 psig) requires 4.1 bar (60 psig) and 18.6 Nm^3/h (11 scfm) air consumption.

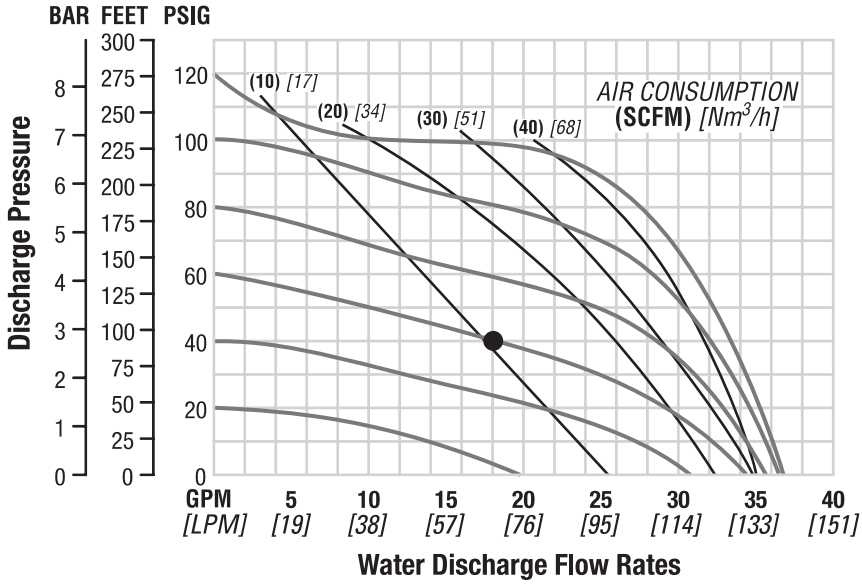

Flow rates indicated on chart were determined by pumping water. For optimum life and performance, pumps should be specified so that daily operation parameters will fall in the center of the pump's performance curve.

Caution: Do not exceed 8.6 bar (125 psig) air supply pressure.

PERFORMANCE

P2 PLASTIC REDUCED-STROKE PTFE-FITTED

Ship Weights.....Polypropylene 8 kg (18 lb)
PVDF 10 kg (23 lb)
Air Inlet.....6 mm (1/4")
Inlet.....25 mm (1")
Outlet.....25 mm (1")
Suction Lift.....3.4 m Dry (11')
8.8 m Wet (29')
Disp. per Stroke[1].....0.23 L (0.061 gal)
Max. Flow Rate.....132 lpm (35 gpm)
Max. Size Solids.....3.2 mm (1/8")

[1]Displacement per stroke was calculated at 4.8 bar (70 psig) air inlet pressure against a 2.1 bar (30 psig) head pressure.

Example: To pump 68 lpm (18 gpm) against a discharge pressure head of 2.7 bar (40 psig) requires 4.1 bar (60 psig) and 37.2 Nm³/h (22 scfm) air consumption.

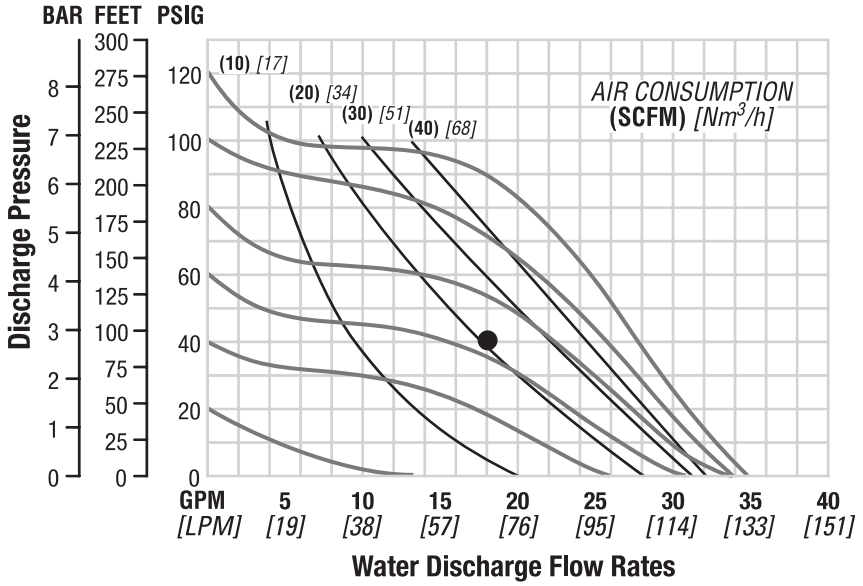

Flow rates indicated on chart were determined by pumping water. For optimum life and performance, pumps should be specified so that daily operation parameters will fall in the center of the pump's performance curve.

Caution: Do not exceed 8.6 bar (125 psig) air supply pressure.

P2 PLASTIC FULL-STROKE PTFE-FITTED

Ship Weights.....Polypropylene 8 kg (18 lb)
PVDF 10 kg (23 lb)
Air Inlet.....6 mm (1/4")
Inlet.....25 mm (1")
Outlet.....25 mm (1")
Suction Lift.....4.1 m Dry (13.6)
8.6 m Wet (28')
Disp. per Stroke[1].....0.23 L (0.06 gal)
Max. Flow Rate.....139 lpm (36.8 gpm)
Max. Size Solids.....6.4 mm (1/4")

[1]Displacement per stroke was calculated at 4.8 bar (70 psig) air inlet pressure against a 2.1 bar (30 psig) head pressure.

Example: To pump 98.4 lpm (26 gpm) against a discharge head of 1.4 bar (20 psig) requires 5.5 bar (80 psig) and 61 Nm³/h (38 scfm) air consumption.

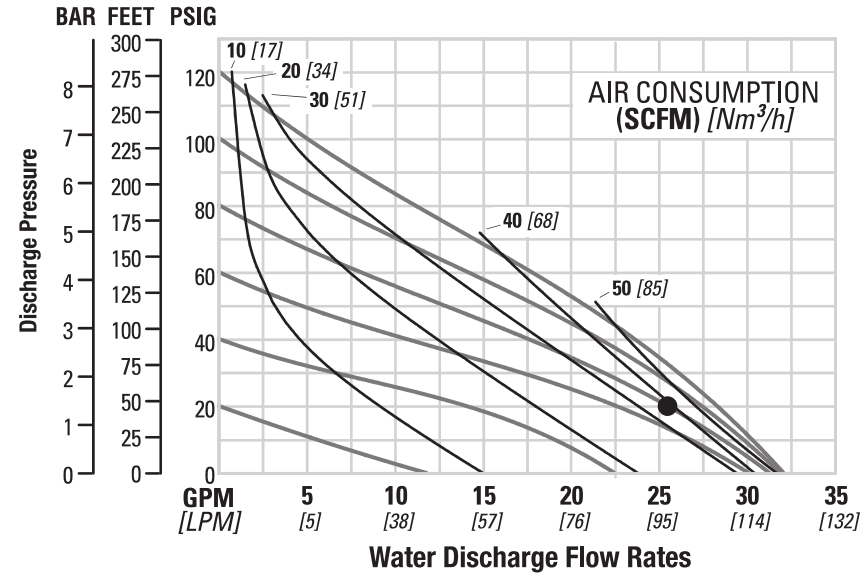

Flow rates indicated on chart were determined by pumping water. For optimum life and performance, pumps should be specified so that daily operation parameters will fall in the center of the pump's performance curve.

Caution: Do not exceed 8.6 bar (125 psig) air supply pressure.

SUCTION LIFT CAPABILITY

P2 PLASTIC SUCTION-LIFT CAPABILITY

Suction-lift curves are calibrated for pumps operating at 305 m (1,000') above sea level. This chart is meant to be a guide only. There are many variables that can affect your pump's operating characteristics. The number of intake and discharge elbows, viscosity of pumping fluid, elevation (atmospheric pressure) and pipe friction loss all affect the amount of suction lift your pump will attain.

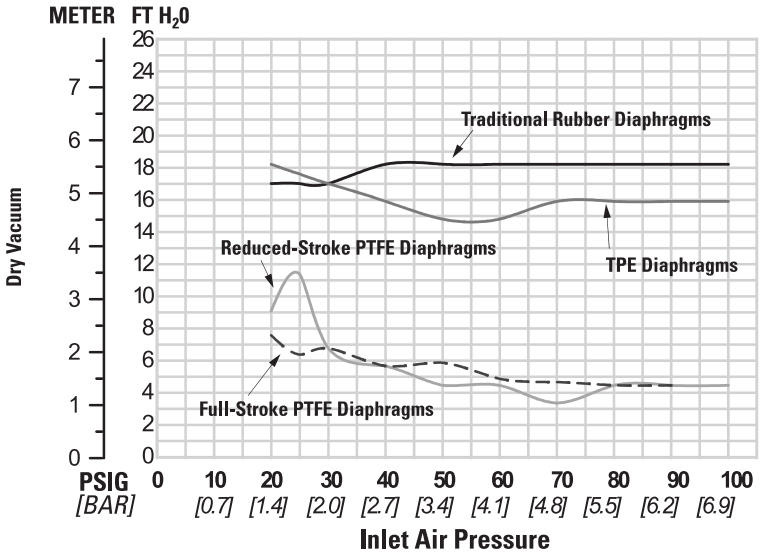

SECTION 6

SUGGESTED INSTALLATION, OPERATION, MAINTENANCE AND TROUBLESHOOTING

Wilden pumps are designed to meet the performance requirements of even the most demanding pumping applications. They have been designed and manufactured to the highest standards and are available in a variety of liquid path materials to meet your chemical resistance needs. Refer to "Performance" for an in-depth analysis of the performance characteristics of your pump. Wilden offers the widest variety of elastomer options in the industry to satisfy temperature, chemical compatibility, abrasion resistance and flex concerns.

The suction pipe size should be at least equal to or larger than the diameter size of the suction inlet on your Wilden pump. The suction hose must be a non-collapsible, reinforced type because these pumps are capable of pulling a high vacuum. Discharge piping should also be equal to or larger than the diameter of the pump discharge, which will help reduce friction losses.

CAUTION: All fittings and connections must be airtight. Otherwise, pump suction capability will be reduced or lost.

Months of careful planning, study and selection efforts can result in unsatisfactory pump performance if installation details are left to chance. You can avoid premature failure and long-term dissatisfaction by exercising reasonable care throughout the installation process.

Location

Noise, safety and other logistical factors usually dictate where equipment will be situated on the production floor. Multiple installations with conflicting requirements can result in congestion of utility areas, leaving few choices for additional pumps.
Within the framework of these and other existing conditions, locate every pump in such a way that the following six key factors are balanced against each other to maximum advantage:

- **Access:** First, the location should be accessible. If it's easy to reach the pump, maintenance personnel will be able to perform routine inspections and adjustments more easily. If major repairs become necessary, ease of access can play a key role in speeding the repair process and reducing total downtime.
- **Air Supply:** Every pump location should have an air line large enough to supply the volume of air necessary to achieve the desired pumping rate. For best results, the pumps should use a 5µ (micron) air filter, needle valve and regulator. The use of an air filter before the pump will ensure that the majority of any pipeline contaminants will be eliminated.
- **Solenoid Operation:** When operation is controlled by a solenoid valve in the air line, three-way valves should be used. This valve allows trapped air between the valve and the pump to bleed off, which improves pump performance. You can estimate pumping volume by counting the number of strokes per minute, and then multiplying that figure by the displacement per stroke.
- **Muffler:** Using the standard Wilden muffler, sound levels are reduced below OSHA specifications. You can use other mufflers to reduce sound levels farther, but they usually reduce pump performance.
- **Elevation:** Selecting a site that is well within the pump's dynamic lift capability will assure that loss-of-prime issues will be eliminated. In addition, pump efficiency can be adversely affected if proper attention is not given to site location.
- **Piping:** Final determination of the pump site should not be made until the piping challenges of each possible location have been evaluated. The impact of current and future installations should be considered ahead of time to make sure that inadvertent restrictions are not created for any remaining sites.

The best choice possible will be a site involving the shortest and straightest hook-up of suction and discharge piping. Unnecessary elbows, bends and fittings should be avoided. Pipe sizes should be selected to keep friction losses within practical limits. All piping should be supported independently of the pump. In addition, the piping should be aligned to avoid placing stress on the pump fittings.

Flexible hose can be installed to aid in absorbing the forces created by the natural reciprocating action of the pump. If the pump is to be bolted down to a solid location, a mounting pad placed between the pump and the foundation will assist in minimizing pump vibration. Flexible connections between the pump and rigid piping will also assist in minimizing pump vibration. If quick-closing valves are installed at any point in the discharge system, or if pulsation within a system becomes a problem, a surge suppressor (SD Equalizer) should be installed to protect the pump, piping and gauges from surges and water hammer.

If the pump is to be used in a self-priming application, make sure that all connections are airtight and that the suction lift is within the model's ability.

NOTE: Materials of construction and elastomer material have an effect on suction lift parameters. Please refer to "Performance" for specifics.

When pumps are installed in applications involving flooded suction or suction head pressures, a gate valve should be installed in the suction line to permit closing of the line for pump service.

Pumps in service with a positive suction head are most efficient when inlet pressure is limited to 0.5–0.7 bar (7–10 psig). Premature diaphragm failure may occur if positive suction is 0.7 bar (10 psig) and higher.

CAUTION: All Wilden pumps are capable of passing solids. Use a strainer on the pump intake to ensure that the pump's rated solids capacity is not exceeded.

CAUTION: Do not exceed 8.6 bar (125 psig) air supply pressure.

CAUTION: Pro-Flo® and Accu-Flo™ pumps do not have single-point exhaust option and are not submersible.

SUGGESTED INSTALLATION, OPERATION, MAINTENANCE AND TROUBLESHOOTING

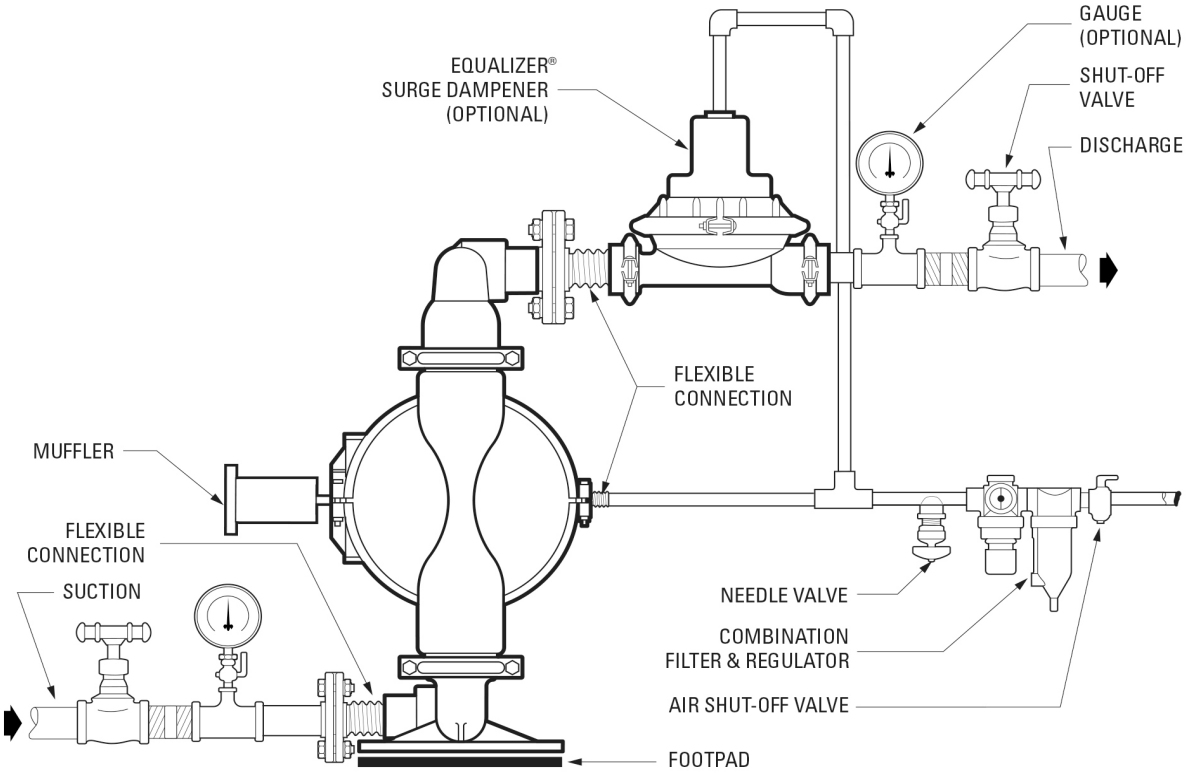

! **NOTE:** In the event of a power failure, close the shut-off valve if you do not want the pump to restart when the power returns.

Air-Operated Pumps: To stop the pump from operating in an emergency, simply close the shut-off valve (user-supplied) installed in the air supply line. A properly functioning valve will stop the air supply to the pump, therefore stopping output. This shut-off valve should be located far enough away from the pumping equipment such that it can be reached safely in an emergency.

Operation

The Pro-Flo pumps are pre-lubricated and do not require in- line lubrication. Additional lubrication will not damage the pump. However, if the pump is heavily lubricated by an external source, the pump's internal lubrication maybe washed away. If the pump is then moved to a nonlubricated location, it may need to be disassembled and re-lubricated as described in "Disassembly/ Reassembly".

Pump discharge rate can be controlled by limiting the volume and/or pressure of the air supply to the pump. An air regulator is used to regulate air pressure. A needle valve is used to regulate volume. Pump discharge rate also can be controlled by throttling the pump discharge by partially closing a valve in the discharge line of the pump. This action increases friction loss, which reduces flow rate. (See "Performance") This is useful when the need exists to control the pump from a remote location. When the pump discharge pressure equals or exceeds the air supply pressure, the pump will stop. No bypass or pressure relief valve is needed, and pump damage will not occur. The pump has reached a "deadhead" situation and can be restarted by reducing the fluid discharge pressure or increasing the air inlet pressure. Wilden Pro-Flo pumps run solely on compressed air and do not generate heat. Therefore, your process fluid temperature will not be affected.

Maintenance and Inspections

Because each application is unique, maintenance schedules maybe different for every pump. Frequency of use, line pressure, viscosity and abrasiveness of process fluid all affect the parts life of a Wilden pump. Periodic inspections have been found to offer the best means for preventing unscheduled pump downtime. Personnel familiar with the pump's construction and service should be informed of any abnormalities that are detected during operation.

SUGGESTED INSTALLATION, OPERATION, MAINTENANCE AND TROUBLESHOOTING

Troubleshooting

Pump will not run or runs slowly.

1. Remove plug from pilot spool exhaust.
2. Ensure that the air inlet pressure is at least 0.4 bar (5 psig) above startup pressure and that the differential pressure (the difference between air inlet and liquid discharge pressures) is not less than 0.7 bar (10 psig).
3. Check air inlet filter for debris (see “Suggested Installation, Operation, Maintenance and Troubleshooting”).
4. Check for extreme air leakage (blow by) that would indicate worn seals/bores in the air valve, pilot spool and main shaft.
5. Disassemble the pump and check for obstructions in the air passageways or objects that would obstruct the movement of internal parts.
6. Check for sticking ball check valves.
    a. If material being pumped is not compatible with pump elastomers, swelling may occur. Replace ball check valves and seals with proper elastomers.
    b. Also, as the check valve balls wear out, they become smaller and can become stuck in the seats. In this case, replace balls and seats.
7. Check for any broken inner piston that would cause the air valve spool to be unable to shift.

Pump runs, but little or no product flows.

1. Check for pump cavitation. Slow pump speed down to allow thick material to flow into liquid chambers.
2. Verify that vacuum required to lift liquid is not greater than the vapor pressure of the material being pumped (cavitation).
3. Check for sticking ball check valves.
    a. If material being pumped is not compatible with pump elastomers, swelling may occur. Replace ball check valves and seals with proper elastomers.
    b. Also, as the check valve balls wear out, they become smaller and can become stuck in the seats. In this case, replace balls and seats.

Pump air valve freezes.

1. Check for excessive moisture in the compressed air.
    a. Either install a dryer or a hot air generator for compressed air.
    b. Alternatively, you may use coalescing filter to remove the water from the compressed air in some applications.

Air bubbles in pump discharge.

1. Check for a ruptured diaphragm.
2. Check tightness of outer pistons (see “Disassembly/Reassembly”).
3. Check tightness of fasteners and integrity of O-rings and seals, especially at intake manifold.
4. Ensure pipe connections are airtight.

Product comes out air exhaust.

1. Check for a diaphragm rupture.
2. Check the tightness of the outer pistons to the shaft.

SECTION 7

DISASSEMBLY / REASSEMBLY

PUMP DISASSEMBLY

Tools Required:

- 5/6" Wrench
- 1/2" Wrench
- 1/2" Socket Drive
- 2 – 1" Sockets or Adjustable Wrench
- Vise equipped with soft jaws (such as plywood, plastic or other suitable material)

CAUTION: Before attempting any maintenance or repair, disconnect the compressed air line to the pump and allow all air pressure to bleed from the pump. Disconnect all intake, discharge, and air lines. Drain the pump by turning it upside down and allowing any fluid to flow into a suitable container. Be aware of any hazardous effects of contact with your process fluid.

NOTE: Your specific pump model may vary from the configuration shown; however, pump disassembly procedure will be the same.

NOTE: The model used for these instructions incorporates rubber diaphragms, balls, and seats. Models with PTFE diaphragms, balls and seats are the same except where noted.

NOTE: Replace worn parts with genuine Wilden parts for reliable performance.

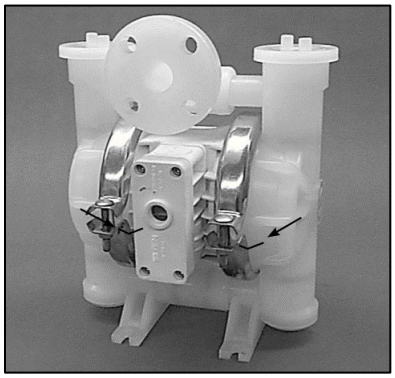

Step 1

Before starting disassembly, mark a line from each liquid chamber to its corresponding air chamber. This line will assist in proper alignment during reassembly.

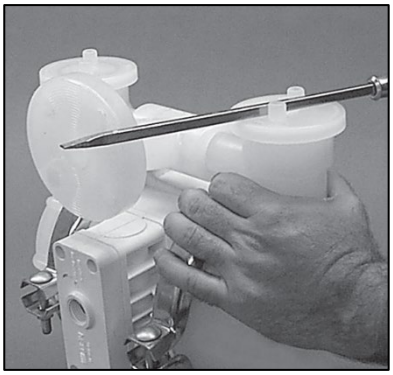

Step 2

Using a screwdriver or other long, slim object, loosen the top liquid retainers from the liquid chambers.

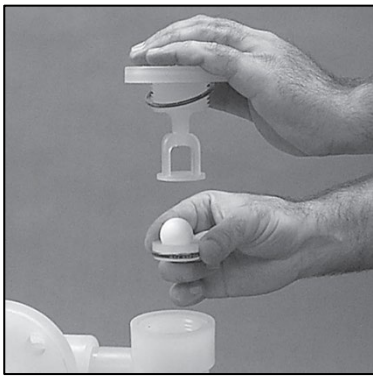

Step 3

Remove the top liquid retainer to expose the valve balls, valve seats and valve seat O-rings.

DISASSEMBLY / REASSEMBLY

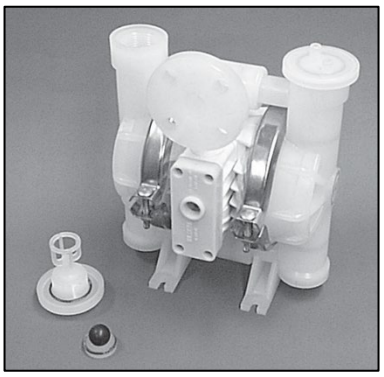

Step 4

Remove the top liquid retainer and retainer O-rings, discharge valve balls, seats and valve seat O-rings from the liquid chamber and inspect for nicks, gouges, chemical attack or abrasive wear.

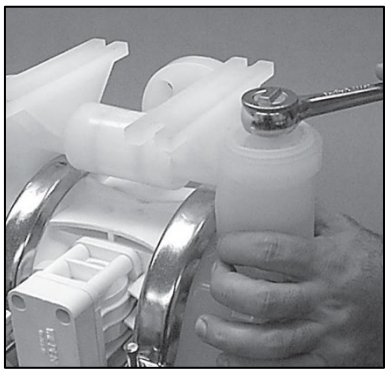

Step 5

Using a 1/2" socket driver, loosen the bottom retainers.

NOTE: Inverting the pump will facilitate removal of inlet manifold.

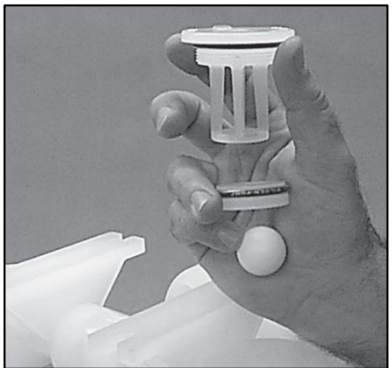

Step 6

Remove the bottom liquid retainer and retainer O-rings, discharge valve balls, seats and valve seat O-rings from the liquid chamber and inspect for nicks, gouges, chemical attack or abrasive wear.

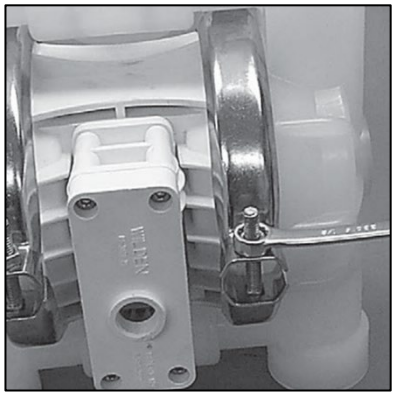

Step 7

With a 1/2" box wrench, loosen the large clamp bands that secure the liquid chambers to the center section.

Step 8

Rotate the clamp bands so that they can be removed.

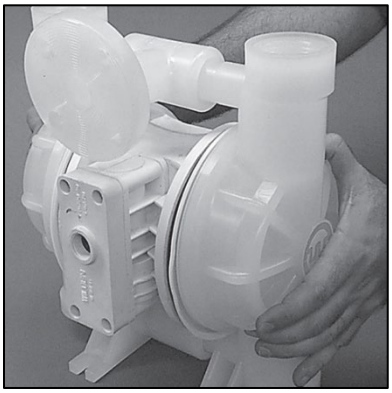

Step 9

After clamp bands are removed, pull liquid chambers apart.

DISASSEMBLY / REASSEMBLY

Step 11

Remove tee section from liquid chamber and inspect O-rings for signs of wear.

Step 12

Using two 1" sockets, remove diaphragm assembly from center section assembly.

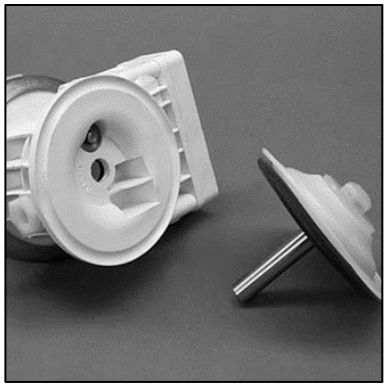

Step 13

Inspect diaphragms, outer and inner pistons and disc spring (not shown) for signs of wear. Replace with genuine Wilden parts
if necessary.

DISASSEMBLY / REASSEMBLY

AIR VALVE DISASSEMBLY

Tools Required:

- 3/16" Hex Head Wrench
- Snap-Ring Pliers
- O-Ring Pick

CAUTION: Before attempting any maintenance or repair, disconnect the compressed air line to the pump and allow all air pressure to bleed from the pump. Disconnect all intake, discharge, and air lines. Drain the pump by turning it upside down and allowing any fluid to flow into a suitable container. Be aware of any hazardous effects of contact with your process fluid.

NOTE: Replace worn parts with genuine Wilden parts for reliable performance.

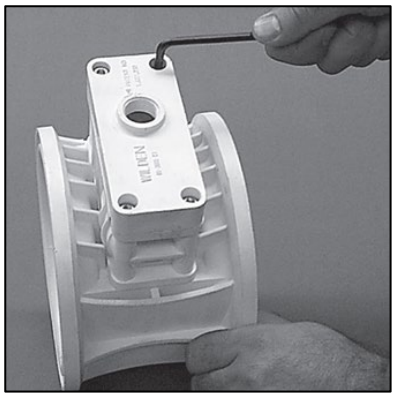

Step 1

Loosen the air valve bolts utilizing a 3⁄16" Hex Head wrench.

Step 2

Remove air valve end cap to expose air valve spool by simply lifting up on end cap once air valve bolts are removed.

Step 3

Lift away air valve assembly and remove air valve gasket for inspection. Replace if necessary.

DISASSEMBLY / REASSEMBLY

Step 4

Remove air valve end cap to expose air valve spool by simply lifting up on end cap once air valve bolts are removed.

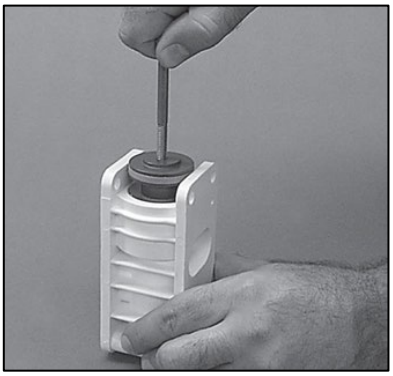

Step 5

Remove pilot spool sleeve retaining snap ring on both sides of center section with snap ring pliers.

NOTE: Seals should not be removed from assembly. Seals are not sold separately.

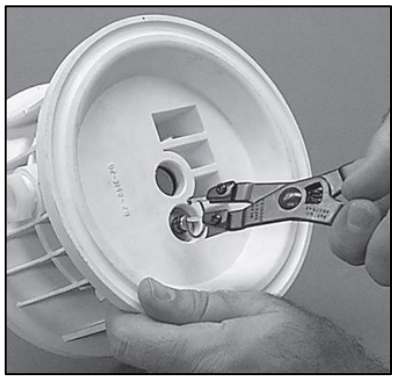

Step 6

Remove pilot spool retaining snap ring on both sides of center section with snap-ring pliers.

Step 7

Remove pilot spool sleeve from center section.

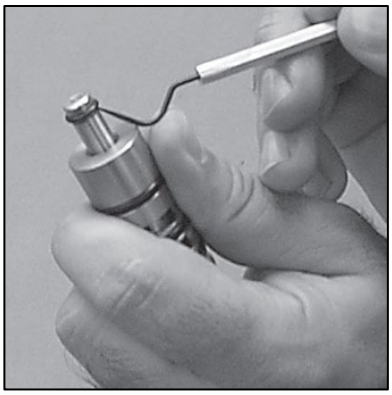

Step 8

With O-ring pick, gently remove pilot spool retaining O-ring. Replace if necessary. Gently remove pilot spool from sleeve and inspect spool and seals for nicks, gouges or other signs of wear. Replace pilot sleeve assembly or outer sleeve O-rings if necessary.

NOTE: Seals should not be removed from assembly. Seals are not sold separately.

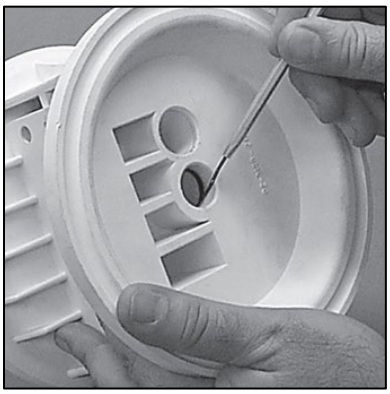

Step 9

Check center section Glyd™ rings for signs of wear. If necessary, remove Glyd™ rings with O-ring pick and replace.

NOTE: Seals should not be removed from assembly. Seals are not sold separately.

DISASSEMBLY / REASSEMBLY

REASSEMBLY HINTS AND TIPS

Upon performing applicable maintenance to the air distribution system, the pump can now be reassembled. Please refer to the disassembly instructions for photos and parts placement.

To reassemble the pump, follow the disassembly instructions in reverse order. The air distribution system needs to be assembled first, then the diaphragms and finally the wetted path. The applicable torque specifications are on this page.

The following tips will assist in the assembly process:

- Lubricate air valve bore, center section shaft and pilot spool bore with NLGI grade 2 white EP bearing grease or equivalent.
- Clean the inside of the center section shaft bore to ensure no damage is done to new shaft seals.
- A small amount of NLGI grade 2 white EP bearing grease can be applied to the muffler and air valve gaskets to locate gaskets during assembly.
- Make sure that the exhaust port on the muffler plate is centered between the two exhaust ports on the center section.
- Stainless bolts should be lubed to reduce the possibility of seizing during tightening.
- Use a mallet to tamp lightly on the large clamp bands to seat the diaphragm before tightening.

Maximum Torque Specifications

Description	Torque
Air Valve, Pro-Flo®	3.1 N•m (27 in-lb)
Air Inlet, Reducer Bushing	0.9 N•m (8 in-lb)
Outer Piston — Rubber- and PTFE-fitted	27.1 N•m (20 ft-lb)
Top and Bottom Retainers	14.1 N•m (125 in-lb)
Large Clamp Band — Rubber-fitted	10.7 N•m (95 in-lb)
Large Clamp Band — PTFE-fitted	14.1 N•m (125 in-lb)

DISASSEMBLY / REASSEMBLY

SHAFT SEAL INSTALLATION

Pre-Installation

After all the old seals have been removed, the inside of the bushing should be cleaned to ensure no debris is left that may cause premature damage to the new seals.

Installation

1. To prevent damaging the inside surface of the new seal, wrap electrical tape around each leg of the needle-nose pliers. (Heat shrink tubing may also be used.)

2. With a new seal in hand, place the two legs of the needle-nose pliers inside the seal ring. (See Figure A.)

3. Open the pliers as wide as the seal diameter will allow, then with two fingers pull down on the top portion of the seal to form a kidney bean shape. (See Figure B.)

4. Lightly clamp the pliers together to hold the seal into the kidney shape. Be sure to pull the seal into as tight of a kidney shape as possible. This will allow the seal to travel down the bushing bore with greater ease.

5. With the seal clamped in the pliers, insert the seal into the busing bore and position the bottom of the seal into the correct groove. When the bottom of the seal is seated in the groove, release the clamp pressure on the pliers. This will allow the seal to partially snap back to its original shape.

6. After removing the pliers, you will notice a slight bump in the seal shape. Before the seal can be resized properly, the bump in the seal should be removed as much as possible. This can be done with either a Phillips screwdriver or your finger. With the side of the screwdriver or your finger, apply light pressure to the peak of the bump. This pressure will cause the bump to be eliminated almost completely.

7. Lubricate the edge of the shaft with NLGI grade 2 white EP bearing grease.

8. Slowly insert the center shaft with a rotating motion. This will complete the resizing of the seal.

9. Repeat these steps for the remaining seals.

Tools

The following tools can be used to aid in the installation of the new seals:

- Needle-Nose Pliers
- Phillips Screwdriver
- Electrical Tape

Figure A

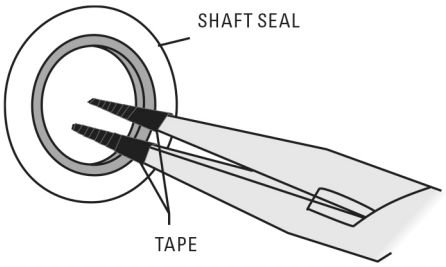

Figure B

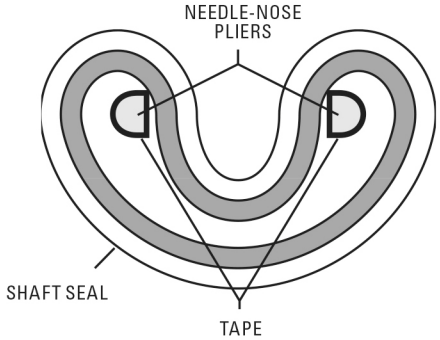

GASKET KIT INSTALLATION (02-9502-99)

Carefully prepare sealing surfaces by removing all debris and foreign matter from diaphragm bead and all mating surfaces. If necessary, smooth or deburr all sealing surfaces. Mating surfaces must be properly aligned in order to ensure positive sealing characteristics.

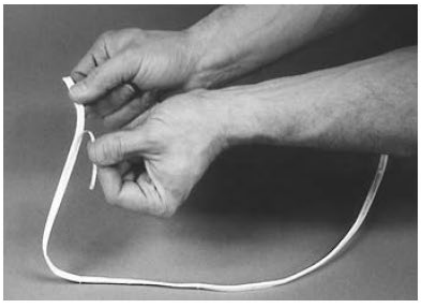

Step 1

Gently remove the adhesive covering from the back of the PTFE tape. Ensure that the adhesive strip remains attached to the PTFE tape.

Step 2

Starting at any point, place the PTFE tape in the center of the diaphragm bead groove on the liquid chamber and press lightly on the tape to ensure that the adhesive holds in place during assembly. Do not stretch the tape during placement in the center of diaphragm bead groove.

Step 3

The end of the tape should overlap approximately 13 mm (1/2"). Proceed to install the PTFE tape on the remaining diaphragm.

EXPLODED VIEW AND PARTS LIST

P2 CLAMPED PLASTIC

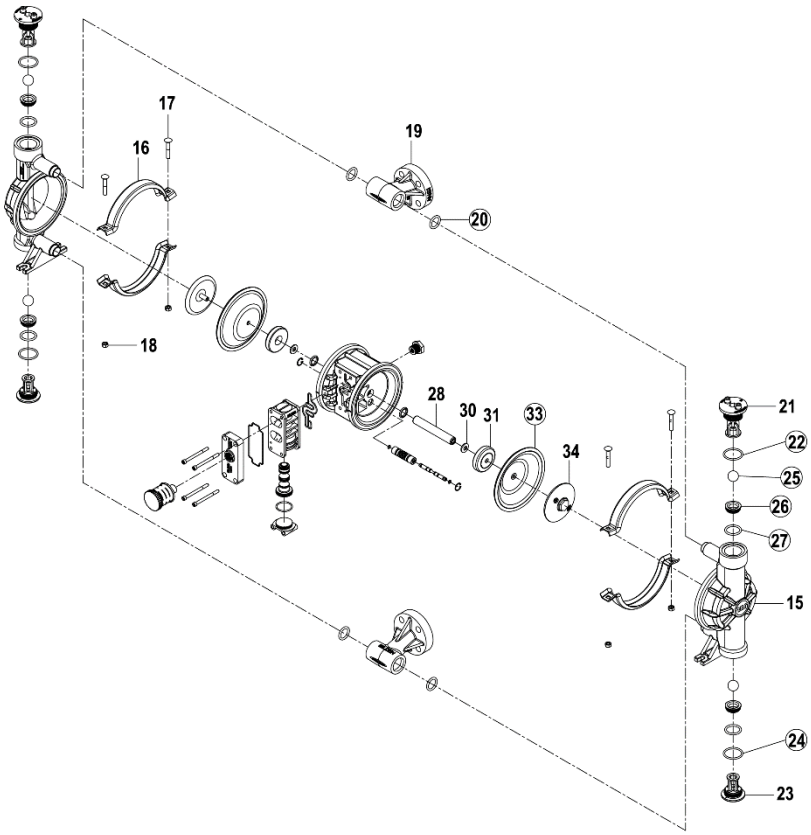

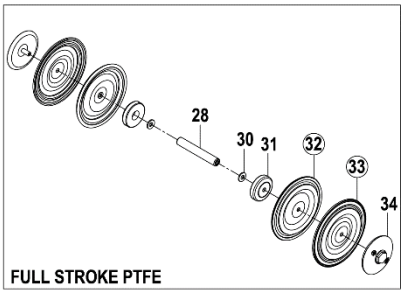

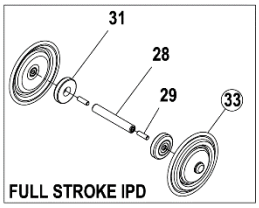

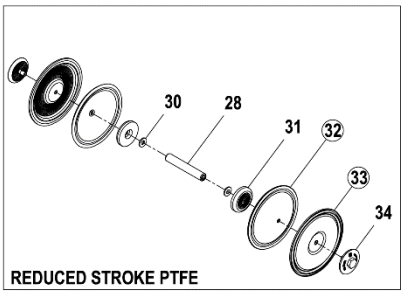

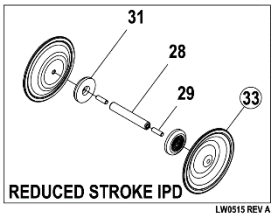

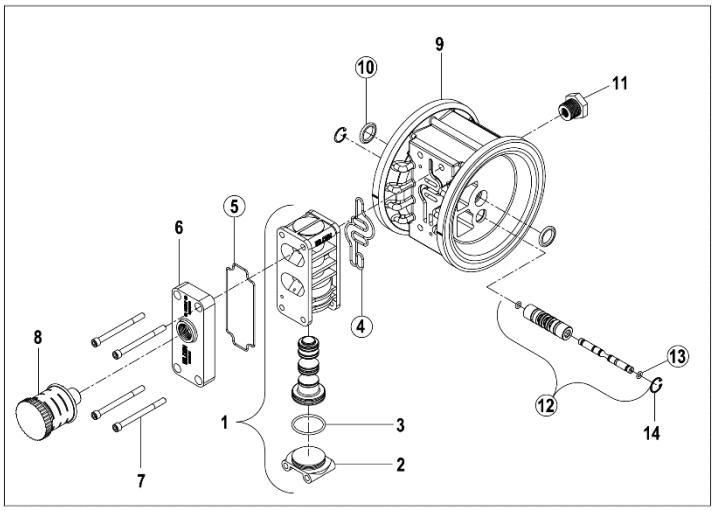

ALL CIRCLED PART IDENTIFIERS ARE INCLUDED IN REPAIR KITS

EXPLODED VIEW AND PARTS LIST

Item	Part Description	Qty	P2/ PKPPP/400 P/N	P2/ PKPPP/402 P/N	P2/ KKPPP/400 P/N	P2/ KKPPP/402 P/N
	AIR DISTRIBUTION COMPONENTS					
1	**Air Valve, Pro-Flo™ Assembly[1]**	**1**	**01-2010-20**			
2	End Cap, Pro-Flo™	1	01-2332-20			
3	**O-Ring, End Cap (-126) (Ø1.362 X Ø.103)**	**1**	**01-2395-52**			
4	**Gasket, Air Valve, Pro-Flo™**	**1**	**01-2615-52**			
5	**Gasket, Muffler Plate, Pro-Flo™**	**1**	**01-3505-52**			
6	Muffler Plate, Pro-Flo™	1	01-3181-20			
7	Screw, SHC, 1/4"-20 X 3"	4	01-6001-03	01-6001-05	01-6001-03	01-6001-05
8	Muffler	1	02-3510-99			
9	Center Section Assembly, Pro-Flo™[2]	1	02-3145-20			
10	**Shaft Seal**	**2**	**02-3210-55-225**			
11	Bushing, Reducer	1	01-6950-20			
12	**Pilot Sleeve Assembly**	**1**	**02-3880-99**			
13	**Pilot Spool Retaining O-Ring**	**2**	**04-2650-49-700**			
14	Retaining Ring	2	00-2650-03			
	WETTED PATH COMPONENTS					
15	Chamber, Liquid	2	02-5001-20-400		02-5001-21-400	
16	Clamp Band Assy. Large[3]	4	02-7300-03-400	02-7300-05-402	02-7300-03-400	02-7300-05-402
17	Bolt, RHSN, 5/16"-18 X 2"	4	08-6050-03-50	08-6050-05-500	08-6050-03-50	08-6050-05-500
18	Nut, Hex, 5/16"-18	4	08-6400-03	08-6400-05	08-6400-03	08-6400-05
19	Manifold, Tee Section (ANSI)	1	02-5160-20-400		02-5160-21-400	
	Manifold, Tee Section (DINI)	1	02-5160-20-404		02-5160-21-404	
20	**O-Ring, Tee Section (-214) (Ø.984 X Ø.139)**	**4**	*			
21	Top Retainer	2	02-5411-20-400		02-5411-21-400	
22	**O-Ring, Top Retainer (-225) (Ø1.875 X Ø.139)**	**2**	*			
23	Bottom Retainer	2	02-5420-20-400		02-5420-21-400	
24	**O-Ring, Bottom Retainer (-222) (Ø1.484 X Ø.139)**	**2**	*			
	VALVE BALLS/VALVE SEATS/VALVE O-RINGS					
25	**Valve Ball**	**4**	*			
26	**Valve Seat**	**4**	*		*	
27	**O-Ring, Valve Seat (-218) (Ø1.234 X Ø.139)**	**4**	*			
	FULL STROKE RUBBER/TPE/PTFE/FSIPD COMPONENTS					
28	Shaft, P2 Pro-Flo™ (Non-PTFE)	1	02-3810-03			
29	Shaft Stud, 3/8"-16 X 1-1/4"	2	02-6150-08			
30	Spring, Disk	2	02-6802-08			
31	Piston, Inner, P2 Pro-Flo™ (Non-PTFE)	2	02-3701-01			
32	**Diaphragm, Back-Up**	**2**	*			
33	**Diaphragm, Primary**	**2**	*			
	Diaphragm, IPD, Primary	**2**	*			
34	Piston, Outer, (Non-PTFE)	2	02-4550-21-500			
	REDUCED STROKE PTFE/IPD COMPONENTS					
28	Shaft, Pro-Flo™ (PTFE)	1	02-3840-03			
29	Shaft Stud, 3/8"-16 X 1-1/4"	2	02-6150-08			
30	Spring, Disk	2	02-6802-08			
31	Piston, Inner, P2 Pro-Flo™ (PTFE)	2	02-3751-01			
32	**Diaphragm, Back-Up, Reduced Stroke PTFE**	**2**	*			
33	**Diaphragm, Primary, Reduced Stroke PTFE**	**2**	*			
	Diaphragm, IPD Primary, Reduced Stroke PTFE	**2**	*			
34	Piston, Outer, (PTFE)	2	02-4600-21-500			

LW0516 Rev A

[1]Air Valve Assembly includes items 2 and 3.
[2]Center Section Assembly includes items 10 and 11.
[3]Large Clamp Band Assembly for standard pumps include items 17 and 18.
*Refer to corresponding elastomer chart in Section 9.
All boldface items are primary wear parts.

ELASTOMER OPTIONS

P2 CLAMPED PLASTIC

Material	Diaphragms (2)	FULL STROKE DIAPHRAGMS (2)	FULL STROKE BACK-UP DIAPHRAGMS (2)	FULL STROKE IPD DIAPHRAGMS (2)	REDUCED STROKE DIAPHRAGMS (2)	REDUCED STROKE BACK-UP DIAPHRAGMS (2)	REDUCED STROKE IPD DIAPHRAGMS (2)	VALVE BALLS (4)	VALVE SEATS (4)	VALVE SEAT O-RINGS (4)	TEE SECTION O-RINGS (4)	TOP RETAINER O-RINGS (2)	BOTTOM RETAINER O-RINGS (2)
Neoprene	02-1010-51					02-1060-51		02-1080-51					
Buna-N	02-1010-52							02-1080-52		08-2390-52	04-2390-52	04-2390-52-700	02-1230-52
FKM	02-1010-53							02-1080-53					
Nordel (EPDM)	02-1010-54					02-1060-54		02-1080-54					
PTFE		02-1040-55			02-1010-55		02-1010-72-85	02-1080-55					
Non-Food Grade Saniflex				02-1031-46									
Saniflex™	02-1010-56		02-1065-56	02-1031-56		02-1060-56		02-1080-56					
Food Grade Saniflex™			02-1065-57	02-1031-57									
Wil-Flex™	02-1010-58			02-1031-58				02-1080-58		02-1200-58-400	02-1300-58-400	02-1220-58	02-1230-58
PTFE Encapsulated FKM										02-1200-60-400	02-1300-60-400	02-1220-60	02-1230-60
Polypropylene									02-1120-20-400				
PVDF									02-1120-21-400				

Backup diaphragms for use with PTFE diaphragms only.

LW0516 Rev A

NOTES

NOTES

NOTES

WILDEN®
PSG
22069 Van Buren Street
Grand Terrace, CA 92313-5651 USA
P: +1 (909) 422 -1730
psgdover.com

Where Innovation Flows

Copyright 2021 PSG®, a Dover® Company
PSG® reserves the right to modify the information and illustrations contained in this document without prior notice. This is a non-contractual document.

WIL-10150-E-12